Aerocool ACP-850FP7

Serial Number D170400607

Lab ID 151

Certification ID 25151

Test Result Report ID:

Certificate Issue Date: Jul 31, 2018

115V 230V

Scheme: ETA-EMI PSU

CYBENETICS PLATINUM

115V 230V

CYBENETICS A+

Scheme: LAMBDA PSU

Aristeidis Bitziopoulos, Certification Body General Manager

General Information

Test Equipment

Electronic Loads	Chroma 63601-5 x2 Chroma 63600-2 Chroma 63640-80-80 x10 Chroma 63610-80-20
AC Sources	Chroma 6530, APM SP300VAC4000W-P, GW Instek ASR-3500
Power Analyzers	Rohde & Schwarz HMC8015 & NPA701
Oscilloscopes	Picoscope 4444, Siglent SDS2104X PLUS
Sound Analyzer	Bruel & Kjaer 2270 G4
Microphone	Bruel & Kjaer Type 4955-A
Temperature Logger	Picoscope TC-08
Tachometer	UNI-T UT372
Multimeters	Keysight 34465A
EMI Analyzer	TekBox TBMR-110M-EU
Isolation Transformer	4kVA
UPS	FSP Champ Tower 3kVA, CyberPower OLS3000E 3kVA
Testing Methodology	Cybenetics PSU Test Protocol

DUT Information(Non-accredited measurements)

Product Identification Details	
Brand	Aerocool
Model	ACP-850FP7
OEM/ODM	Andyson
Serial Number	D170400607
Product Specifications	
Manufacturer-Provided Information	
Rated Voltage (Vrms)	100-240
Rated Current (Arms)	12-6
Rated Frequency (Hz)	50-60

Rated Power (W)	850
Operating Temperature (Continuous Full Load) (°C)	
Type	ATX12V
Cable Design	Fully Modular
Warranty	-
Cybenetics Measurements	
Dimensions (W x H x D)	
Weight	
Cooling	140mm Fluid Dynamic Bearing Fan (CD1425M12F)
Semi-Passive Operation	✓
Cybenetics Testing Information	
Lab ID	151
Date of receipt	Jul 20, 2018
Testing Date	Jul 29, 2018
Report Issued Date	Jul 31, 2018
DUT Notes	Retested on 7/28/17
Engineer Name	-
Authorized By the Laboratory Technical Manager	Aristeidis Bitziopoulos
Signature	

Cables and Connectors(Non-accredited measurements)

Modular Cables			
Description	Cable Count	Connector Count (Total)	Gauge
ATX connector 20+4 pin (600mm)	1	1	16-20AWG
8 pin EPS12V (700mm)	1	1	16AWG
4+4 pin EPS12V (700mm)	1	1	16AWG
6+2 pin PCIe (600mm+150mm) / 6+2 pin PCIe (600mm)	2 / 2	4 / 2	18AWG
SATA (600mm+150mm+150mm+150)	2	8	18AWG
SATA (600mm+150mm) / 4 pin Molex (+150mm+150mm)	1	2 / 2	18AWG
4 pin Molex (600mm+150mm+150mm+150mm)	1	4	18AWG

FDD Adapter (+200mm)	1	1	20AWG
GRB DC Adapter (720mm+110mm)	1	2	28AWG

Power Specifications

Rail		3.3V	5V	12V	5VSB	-12V
Max. Power	Amps	20	20	70	3	0.5
	Watts	120		840	15	6
Total Max. Power (W)		850				

Parts Description

General Data	
Manufacturer (OEM)	Andyson
Primary Side	
Transient Filter	4x Y caps, 3x X caps, 2x CM chokes, 1x MOV
Inrush Protection	NTC Thermistor & Diode
Bridge Rectifier(s)	2x GBU1506L (600V, 15A @ 100°C)
APFC MOSFETS	2x Infineon IPP50R140CP (550V, 15A @ 100°C, 0.14 Ohm)
APFC Boost Diode	1x CREE C3D10060A (600V, 14A @ 135°C)
Hold-up Cap(s)	2x Hitachi (420V, 470uF each or 940uF combined, 2000h @ 105°C, HU)
Main Switchers	2x Infineon IPP50R140CP (550V, 15A @ 100°C, 0.14 Ohm) Driver IC: Silicon Labs Si8230BD
APFC Controller	Champion CM6502S
APFC Controller	Champion CM6901
Topology	Primary side: Half-Bridge & LLC Resonant Controller Secondary side: Synchronous Rectification & DC-DC converters
Secondary Side	
+12V MOSFETS	8x Infineon BSC010N04LS (40V, 100A @ 100°C, 1.0 mOhm)
5V & 3.3V	DC-DC Converters: 2x CSD86350Q5D power blocks PWM Controller: 2x Anpec APW7073
Filtering Capacitors	Electrolytics: Nippon Chemi-Con (105°C, KY, KZE), 1x Nichicon (4-10,000h, 105°C, HE) Polymers: 1x Nippon Chemi-Con, 6x FPCAP

Supervisor IC	SITI PS223 (OVP, UVP, OCP, SCP, OTP)
Fan Model	140mm LED fan (12V, 0.24A, 1623RPM, FDB)
5VSB Circuit	
FET / Rectifier	1x APEC AP92U03GM / PFR10V45CT (45V, 5x 2A, 0.4V @ 125°C) Driver IC: MIC4426
Standby PWM Controller	Sanken STR-A6069H
-12V Circuit	
Rectifier	KODENSHI AUK SN7912PI (-12V, 2.2A @ 25°C)

Test Results

Temperature & Compliance Info

Temperature Range (°C /°F)	28-32 / 82.4-89.6
ErP Lot 3/6 Ready	ErP Lot 3/6 2010: ✓ ErP Lot 3/6 2013: ✓ ErP Lot 3/6 2014, CEC: Partially
(EU) No 617/2013 Compliance	✓

Performance Summary 115V

Accredited	
Average Efficiency (>1450 load combinations)	90.154%
Average Noise Output (>1450 Load Combinations)	19.55dBA
Average PF (>1450 Load Combinations)	0.983
Efficiency With 10W (≤500W) or 2% (>500W) Load	-
Standby Power Consumption	0.0592W
Non-Accredited	
12V Ripple (Full Load)	27.19mV
5V Ripple (Full Load)	15.59mV
3.3V Ripple (Full Load)	14.13mV
5VSB Ripple (Full Load)	25.84mV
12V Load Regulation	0.64%
5V Load Regulation	0.45%

3.3V Load Regulation	1.04%
5VSB Load Regulation	1.64%
Inrush Current	46.774A

Hold-Up Time & PWR_OK Signal

Hold-Up Time (ms)	19.51
AC Loss to PWR_OK Hold Up Time (ms)	17.60
PWR_OK Inactive to DC Loss Delay (ms)	1.91

Graphs 115V

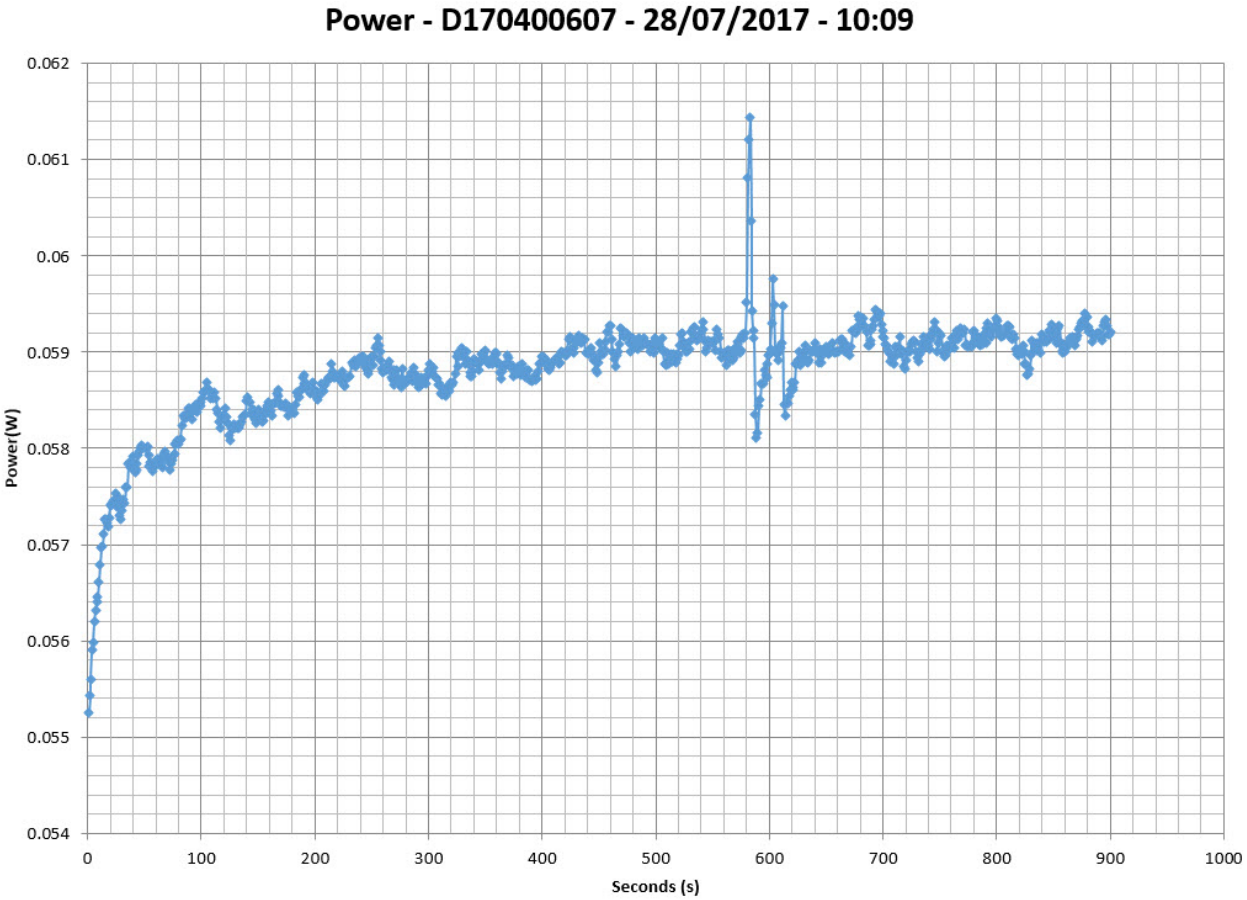
Power - D170400607 - 28/07/2017 - 10:09
Power(W)
0.062
0.061
0.06
0.059
0.058
0.057
0.056
0.055
0.054
0
100
200
300
400
500
600
700
800
900
1000
Seconds (s)

Efficiency Graph

115V

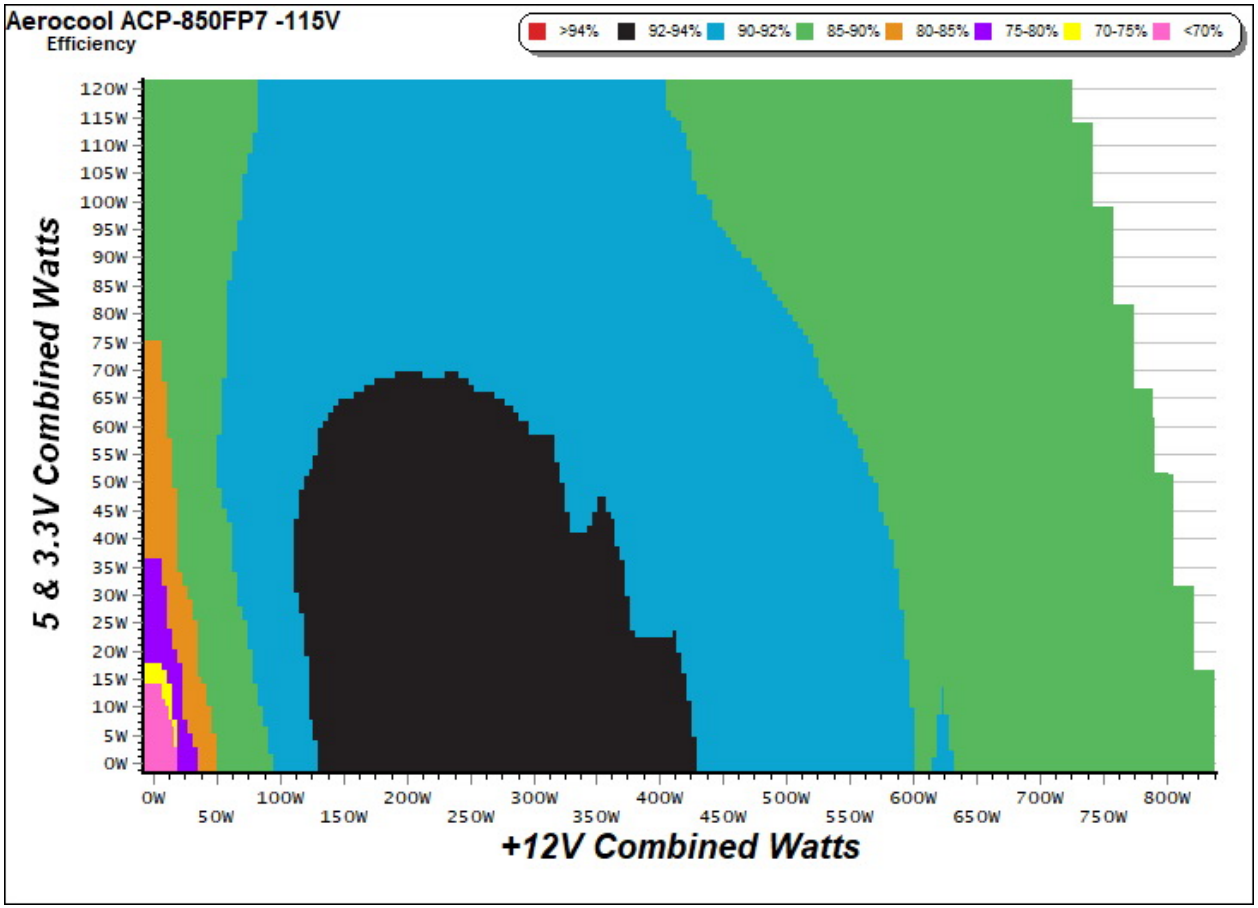

INFO

This graph depicts the PSU`s efficiency throughout its entire operational range. For the generation of the efficiency and noise graphs we set our loaders to auto mode through our custom-made software before trying thousands of possible load combinations.

Noise Graph

115V

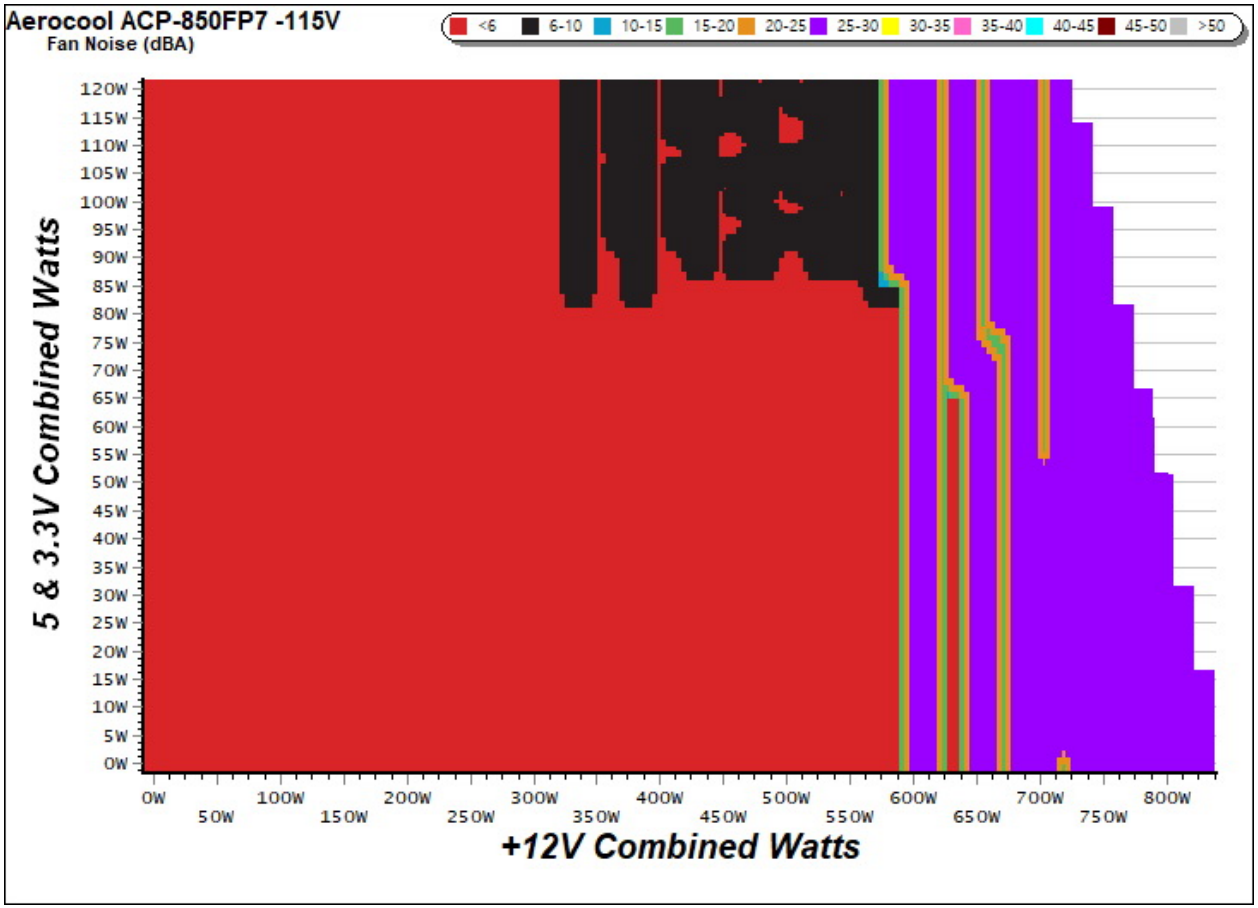

INFO

The PSU`s noise in its entire operational range and under 30-32 °C ambient is depicted in this graph. The X axis represents the load on the +12V rail(s) while the Y axis is the load on the minor rails.

Indicative Performance

Efficiency under high ambient temperature

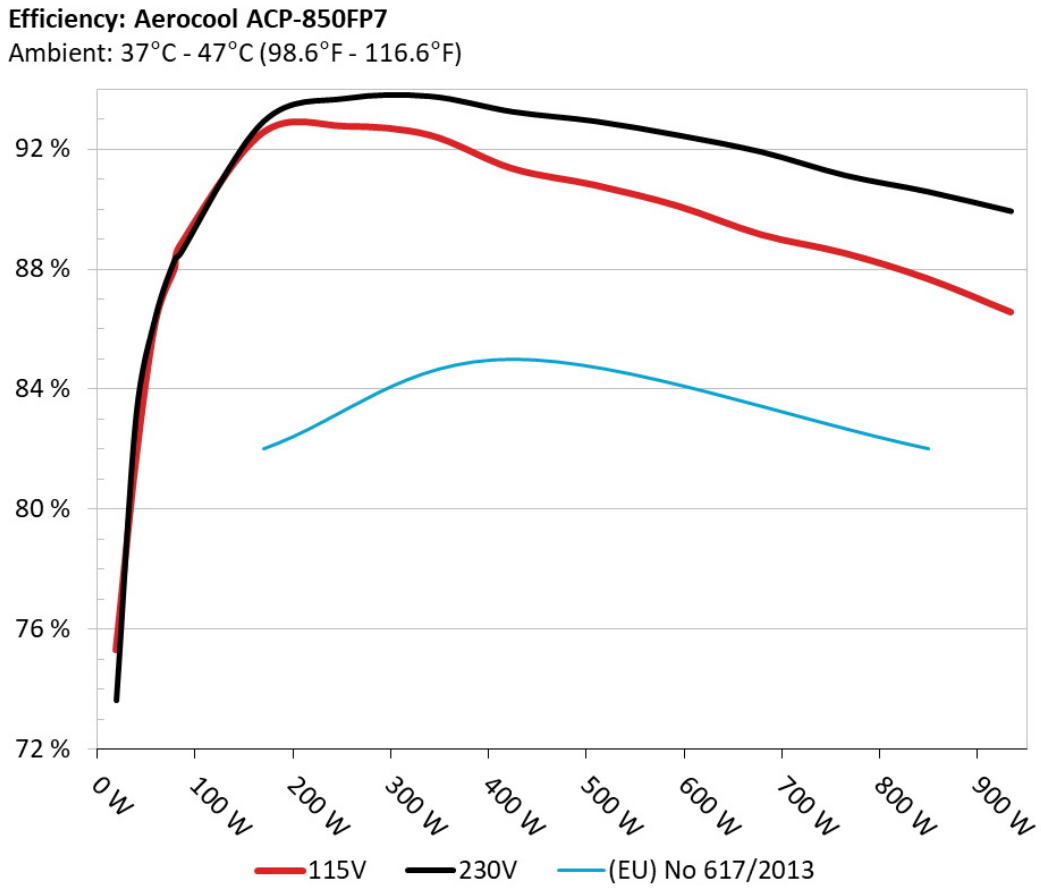

INFO

The PSU`s efficiency under high ambient temperatures with 115V and 230V input. For this graph the results of the 10-110% load regulation table are used.

5VSB Efficiency

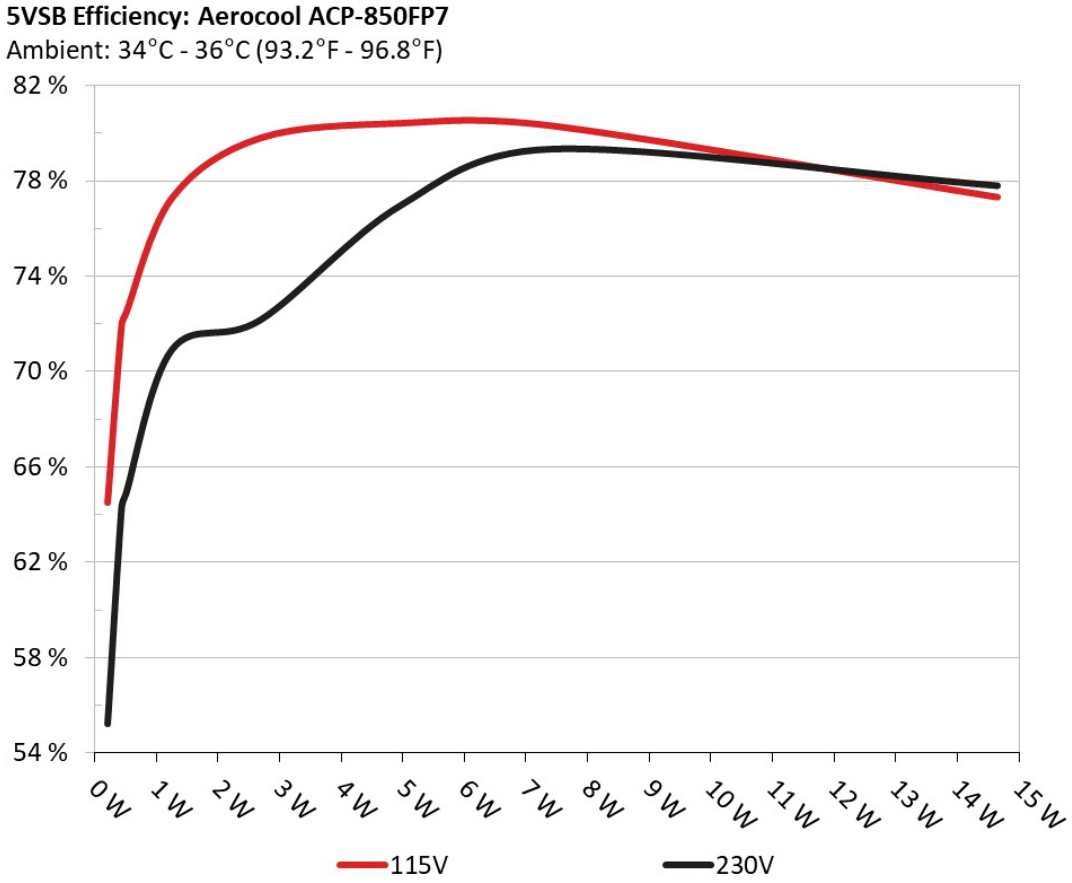

INFO

This graph depicts the efficiency levels of the 5VSB rail with 115V and 230V input.

5VSB Efficiency (ERP LOT 3/6 & CEC) 115V

Test #	5VSB	DC/AC (Watts)	Efficiency	PF/AC Volts
1	0.042A	0.207	64.486%	0.024
	4.988V	0.321		115.18V

2	0.087A	0.433	71.927%	0.045
	4.987V	0.602		115.18V
3	0.542A	2.694	79.822%	0.214
	4.971V	3.375		115.17V
4	1.002A	4.964	80.441%	0.313
	4.955V	6.171		115.17V
5	1.501A	7.414	80.334%	0.374
	4.938V	9.229		115.17V
6	3.001A	14.658	77.331%	0.457
	4.884V	18.955		115.17V

Supplementary Tests (For Reference)

Typical Load Tests 115V

Load Regulation & Efficiency Tests
Aerocool ACP-850FP7 -115V

Test #	12V	5V	3.3V	5VSB	DC/AC (Watts)	Efficiency	Fan Speed (RPM)	PSU Noise (dB[A])	Temps (In/Out)	PF/AC Volts
1	5.184A	1.976A	1.954A	0.990A	84.747	88.776%	0	<6.0	44.13°C	0.938
	12.188V	5.058V	3.372V	5.031V	95.462				38.41°C	115.21V
2	11.385A	2.960A	2.937A	1.190A	169.602	92.562%	0	<6.0	44.76°C	0.972
	12.188V	5.057V	3.368V	5.026V	183.231				38.65°C	115.23V
3	17.962A	3.467A	3.445A	1.391A	254.857	92.779%	0	<6.0	45.65°C	0.977
	12.179V	5.055V	3.365V	5.018V	274.693				38.86°C	115.23V
4	24.531A	3.956A	3.924A	1.595A	339.711	92.488%	0	<6.0	47.32°C	0.983
	12.170V	5.053V	3.361V	5.010V	367.302				39.27°C	115.23V
5	30.765A	4.960A	4.912A	1.795A	424.648	91.370%	395	6.5	41.06°C	0.988
	12.161V	5.049V	3.357V	5.004V	464.756				55.50°C	115.21V
6	37.017A	5.946A	5.904A	2.000A	509.595	90.812%	395	6.5	41.64°C	0.991
	12.151V	5.047V	3.353V	4.998V	561.155				56.73°C	115.21V
7	43.272A	6.944A	6.896A	2.200A	594.507	90.112%	395	6.5	42.67°C	0.993
	12.142V	5.043V	3.349V	4.993V	659.741				60.74°C	115.21V

8	49.545A	7.937A	7.891A	2.405A	679.459	89.160%	1025	27.8	44.25°C	0.994
	12.132V	5.040V	3.344V	4.985V	762.067				62.96°C	115.21V
9	56.257A	8.446A	8.409A	2.405A	764.566	88.544%	1025	27.8	44.63°C	0.995
	12.122V	5.036V	3.341V	4.985V	863.487				63.53°C	115.21V
10	62.717A	8.942A	8.896A	3.020A	849.340	87.693%	1045	28.2	45.35°C	0.995
	12.112V	5.035V	3.338V	4.965V	968.538				64.52°C	115.21V
11	69.767A	8.946A	8.905A	3.020A	934.250	86.579%	1410	36.4	46.57°C	0.996
	12.105V	5.034V	3.335V	4.963V	1079.074				65.86°C	115.21V
CL1	0.097A	14.027A	14.004A	0.004A	118.996	86.427%	395	6.5	43.80°C	0.958
	12.196V	5.049V	3.354V	5.101V	137.684				57.24°C	115.22V
CL2	69.934A	1.004A	1.002A	1.001A	861.033	87.731%	1045	28.2	46.16°C	0.995
	12.120V	5.040V	3.348V	5.012V	981.447				63.92°C	115.22V

The results above are not used in the certification process

Light Load Tests 115V

Test #	12V	5V	3.3V	5VSB	DC/AC (Watts)	Efficiency	Fan Speed (RPM)	Fan Noise (dB[A])	PF/AC Volts
1	1.196A	0.493A	0.471A	0.195A	19.647	75.302%	0	| 6	0.800
	12.192V	5.054V	3.372V	5.048V	26.091				115.21V
2	2.418A	0.981A	0.976A	0.395A	39.722	81.536%	0	| 6	0.885
	12.190V	5.058V	3.373V	5.045V	48.717				115.21V
3	3.644A	1.478A	1.479A	0.593A	59.873	86.238%	0	| 6	0.921
	12.190V	5.058V	3.372V	5.042V	69.428				115.21V
4	4.857A	1.976A	1.954A	0.790A	79.760	88.051%	0	| 6	0.934
	12.188V	5.058V	3.372V	5.036V	90.584				115.21V

The results above are not used in the certification process

Ripple Measurements 115V

Test	12V	5V	3.3V	5VSB	Pass/Fail
10% Load	5.6 mV	7.2 mV	6.7 mV	10.8 mV	Pass
20% Load	10.5 mV	7.9 mV	7.1 mV	14.8 mV	Pass

Test	12V	5V	3.3V	5VSB	Pass/Fail
30% Load	11.6 mV	9.3 mV	7.9 mV	15.0 mV	Pass
40% Load	13.0 mV	9.9 mV	9.7 mV	15.9 mV	Pass
50% Load	15.6 mV	10.2 mV	9.1 mV	17.5 mV	Pass
60% Load	17.4 mV	11.2 mV	10.6 mV	19.8 mV	Pass
70% Load	19.6 mV	12.8 mV	12.3 mV	20.1 mV	Pass
80% Load	22.6 mV	12.7 mV	13.0 mV	21.9 mV	Pass
90% Load	24.3 mV	14.2 mV	12.9 mV	23.9 mV	Pass
100% Load	27.2 mV	15.6 mV	14.1 mV	25.8 mV	Pass
110% Load	30.4 mV	16.2 mV	16.3 mV	29.6 mV	Pass
Crossload 1	21.4 mV	9.4 mV	9.0 mV	13.7 mV	Pass
Crossload 2	27.6 mV	15.6 mV	13.4 mV	25.9 mV	Pass

The results above are not used in the certification process

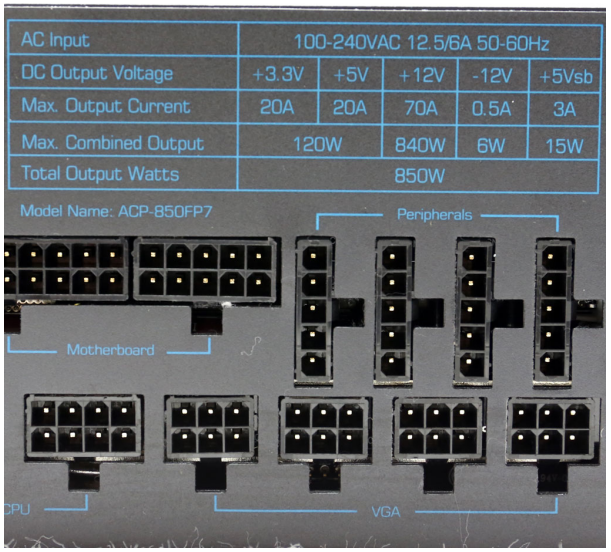

Aerocool ACP-850FP7

Top side

Power specifications label

Cybenetics 提供自願性認證方案: 電源供應器方面有 ETA (效率)、 LAMBDA (噪音) 與 SAFE (安全與正確運作)；散熱產品方面有 DELTA (機殼隔音) 與 PHI (風扇風量與靜壓)

CYBENETICS LTD Syrou 6, Latsia, 2231, Nicosia Cyprus

www.cybenetics.com - info@cybenetics.com